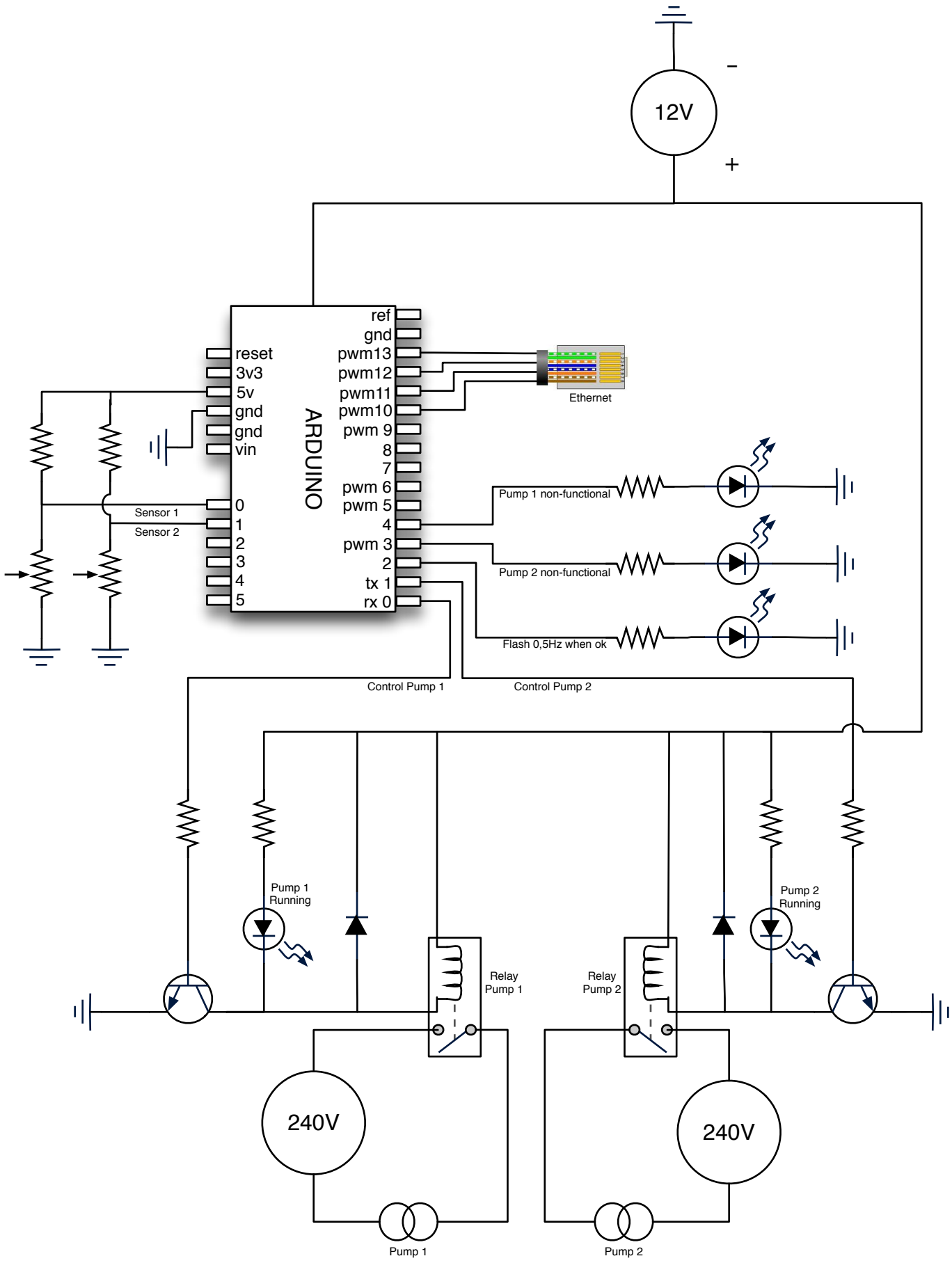
12V
-
+
ARDUINO
reset
3v3
5v
gnd
gnd
vin
0
1
2
3
4
5
ref
gnd
pwm13
pwm12
pwm11
pwm10
pwm 9
8
7
pwm 6
pwm 5
4
pwm 3
2
tx 1
rx 0
Ethernet
Sensor 1
Sensor 2
Pump 1 non-functional
Pump 2 non-functional
Flash 0,5Hz when ok
Control Pump 1
Control Pump 2
Pump 1
Running
Pump 2
Running
Relay
Pump 1
Relay
Pump 2
240V
240V
Pump 1
Pump 2